TATRA

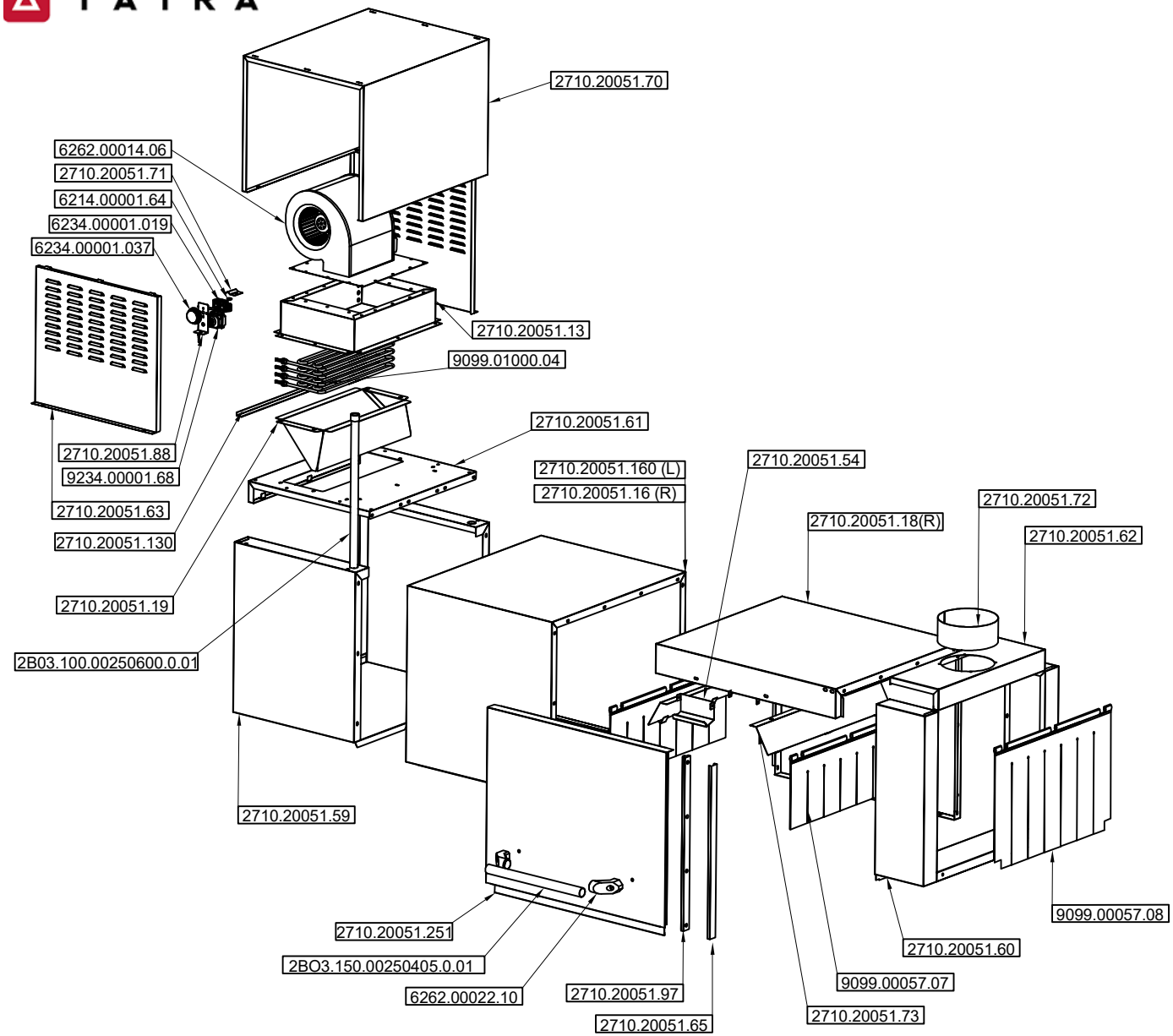

Codes / Item Names	
2710.20051.70	OBK 2000 - 1500 DRYING TOP COVER
6262.00014.06	DRYER FAN MOTOR
2710.20051.71	OBK 2000 - 1500 THERMOSTAT PROBE SHEET
6214.00001.64	NUT M10X1 AA14 BRASS
6234.00001.019	THERMOSTAT 30-120°C FSTB WYG120S-061
6234.00001.037	THERMOSTAT 30-120 C (EGO)
2710.20051.88	OBK 2000 - 1500 DRYING THERMOSTAT CONNECTION SHEET
9234.00001.68	THERMOSTAT 170 C LIMIT (FSTB WYF170G-ZS4)
2710.20051.63	OBK 2000 - 1500 DRYING LID WITH LOUVRE
2710.20051.130	OBK 2000 - 1500 DRIYING FAN SUPPORT SHEET
2710.20051.19	OBK 2000 - 1500 DRYING HOOD
2BO3.100.00250600.0.01	PIPE - 304 - Ø25x1,00 - 600 mm 2000 DRYING CABINET PIPE
2710.20051.59	OBK 2000 - 1500 DRYING CABINET
2710.20051.251	OBK 1500 CABIN MAIN WASH COVER
2BO3.150.00250405.0.01	OBK 1500 MAIN WASH COVER HANDLE PIPE
2710.20051.97	OBK 2000 - 1500 CABIN COVER SLIP - 59 cm
2710.20051.65	OBK 2000 - 1500 CABIN COVER SLIDE RAIL
2710.20051.73	OBK 2000 - 1500 CURTAIN HANGER (WIDE) SHEET
9099.00057.07	CURTAIN INTERNAL WASHING 250MM*600MM (1500-2000 T/H) SHORT
2710.20051.60	OBK 2000 - 1500 ENTRANCE CABIN
9099.00057.08	CURTAIN INLET/OUTLET 570MM*480MM (1500-2000 T/S) LONG
2710.20051.62	OBK 2000 - 1500 ENTRANCE CABIN CENTRE
2710.20051.72	OBK 2000 - 1500 STEAM CHIMNEY
2710.20051.18(R)	OBK 2000 - 1500 MAIN WASHING CABIN RIGHT
2710.20051.180	OBK 2000 - 1500 MAIN WASHING CABIN LEFT
2710.20051.54	OBK 2000 - 1500 ON COVER STOPPER
2710.20051.16(R)	OBK 2000 - 1500 RINSING CABINET RIGHT
2710.20051.160 (L)	OBK 2000 - 1500 RINSING CABINET LEFT
2710.20051.61	OBK 2000 - 1500 DRYING CABINET CENTRE
9099.01000.04	RESISTANCE 2000W IRCA AISI 304 (DRYING)
2710.20051.13	OBK 2000 - 1500 DRYING FAN CONNECTION

BRAND NAME			MODEL NAME		
R&D	NAME	DATE	PROJECT NO	MATERIAL	VERSION
DRAWN					V25.10
CONTROL	S.GURCO	12.05.2026			
APPROV.	M.HACI	12.05.2026			

TATRA

DESCRIPTION 076R.1111KR.BI-076L.1111KR.BI TOP GROUP EXPLODED WITH DRYER

DESCRIPTION 2

DO NOT SCALE FROM DRAWING! | ALL DIMENSIONS ARE IN (mm) | WEIGHT(gr.) | THICKNESS | REVISION | SCALE | DRAWING NO

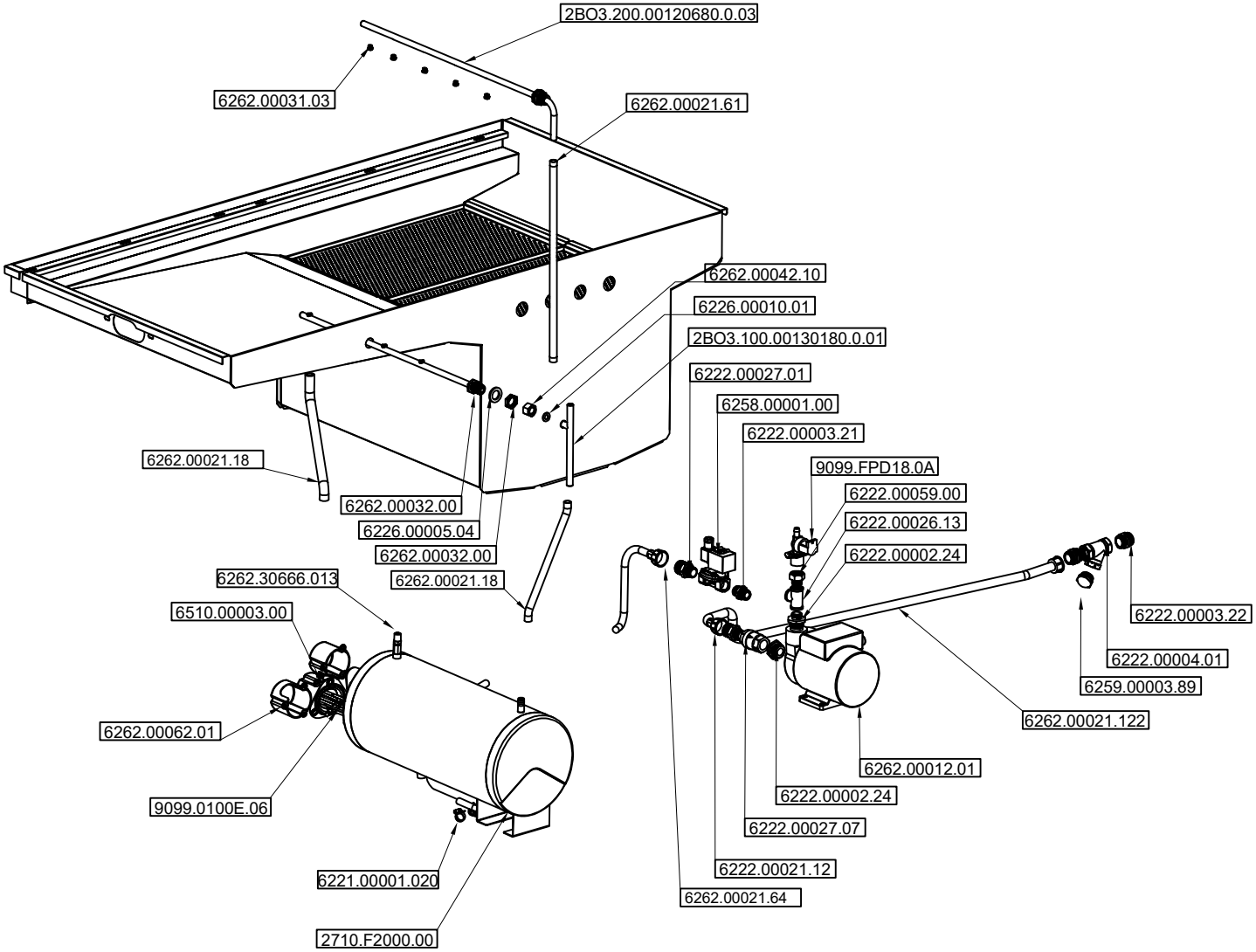

Codes / Item Names	
6262.00031.03	RINSING FOUNTAIN 2000 T/S
2BO3.200.00120680.0.03	PIPE - 304 - Ø12x2,00 - 680 mm 2000 TOP RINSE PIPE
6262.00021.18	HOSE 1/2
6262.00042.10	1/2' HOSE UNION NUT BRASS
6226.00010.01	KLINGER GASKET 1/2"
2BO3.100.00130180.0.01	PIPE - 304 - Ø13x1,00 - 180 mm 2000 RINSE T PIPE BODY
6222.00027.07	PLASTIC DN20 (FOR 20MM 3/4' PLASTIC VALVE)
6258.00001.00	SELENOID VALVE 1/2" 80C 0,5-16 BAR 220V AC
6222.00003.21	NIPPLE 1/2 BRASS (HEAVY TYPE)
9099.FPD18.0A	3/4 PLASTIC VALVE
6222.00059.00	NOZZLE 1/2*3/4 RICE (HEAVY TYPE)
6222.00026.13	TE 1/2 BRASS (HEAVY TYPE)
6259.00003.89	NIPPLE 3/4 BRASS
6222.00004.01	DIRT TRAP 3/4 YELLOW
6262.00021.122	HOSE WATER INLET 3/4-3/4 REKORLU - 100 CM FILTERED
6262.00012.01	RINSING PUMP
6222.00002.24	REDUCTION 1' - 1/2' BRASS (HEAVY TYPE)
6222.00027.07	CHECK VALVE 3/4 BRASS
6262.00021.12	3/4" WATER INLET HOSE
6262.00021.64	WATER INLET HOSE SINGLE SIDE REKORED 90 BEND 65 CM EPDM
2710.F2000.00	OBK 2000 - 1500 BOILER
6221.00001.020	CLAMP 12X20
9099.0100E.06	RESISTANCE 9000 W IRCA INCOLOY 800
6262.00062.01	BOILER TANK HEATER COVER
6510.00003.00	FLANGE END WITHOUT HOLE
6262.30666.013	RINSE-AID CONNECTION CHECK VALVE
6262.00032.00	CAP 12.2 UNION AND NUT (1/2 ' DISC) STAINLESS STEEL
6226.00005.04	AIR TRAP GASKET

BRAND NAME			MODEL NAME		
R&D	NAME	DATE	PROJECT NO	MATERIAL	VERSION
DRAWN					V25.10
CONTROL	S.GURCO	12.05.2026			
APPROV.	M.HACI	12.05.2026			

TATRA

DESCRIPTION: 076R.1111KR.BI-076L.1111KR.BI RINSING GROUP EXPLODED

DESCRIPTION 2:

DRAWING NO:

DO NOT SCALE FROM DRAWING! | ALL DIMENSIONS ARE IN (mm) | WEIGHT(gr.) | THICKNESS | REVISION | SCALE

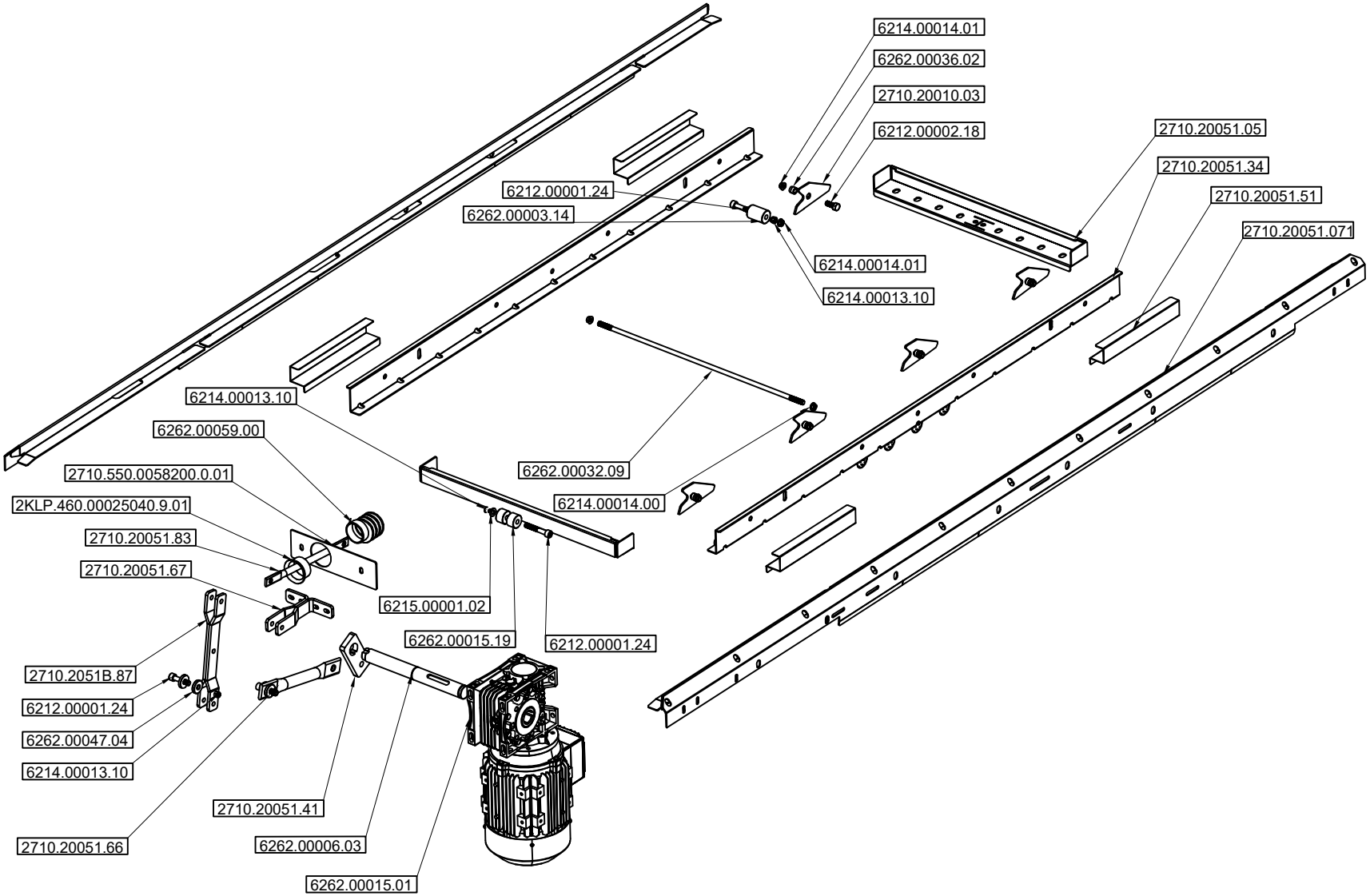

BRAND NAME			MODEL NAME		
R&D	NAME	DATE	PROJECT NO	MATERIAL	VERSION
DRAWN					V25.10
CONTROL	S.GÜRCÜ	12.05.2026			
APPROV.	M.HACI	12.05.2026			

TATRA

DESCRIPTION: 076R.1111KR.BI-076L.1111KR.BI SLIDE GROUP EXPLODED

DO NOT SCALE FROM DRAWING!

ALL DIMENSIONS ARE IN (mm)

WEIGHT(gr.)	THICKNESS	REVISION	SCALE

Codes / Item Names	
2710.20051.071	OBK 1500 CARRIER SLIDE WITH DRYING / 2000 WITH DRYING
2710.20051.51	OBK 2000 - 1500 MOVABLE SLIDE ROLLER SEAT
2710.20051.34	OBK 1500 MOVING SLEDGE
2710.20051.05	OBK 2000 - 1500 MOVABLE SLIDE SIDE CONNECTION
6214.00014.01	M6 HEX NUT WITH FLANGE
6262.00036.02	OBK 2000 METAL NAIL SPACER
2710.20010.03	OBK 2000 - 1500 MOVABLE SLIDE CLAW STAINLESS STEEL
6212.00002.18	M8*20 HEX SS BOLT
6214.00014.01	M6 HEX NUT WITH FLANGE
6214.00013.10	M6 NYLON INSERT LOCK NUT
6262.00003.14	CONVEYOR SLEDGE PULLEY 1500-2000 T/S
6212.00001.24	BOLT M6*60
6262.00032.09	CONVEYOR MACHINE MOVING SLEEVE STUB Q8*480 MM INOX
6214.00014.00	M8 HEX NUT WITH FLANGE
6212.00001.24	M6*60 INOX IMBUS BOLT
6262.00015.19	MOVING SLIDE BEARING ROLLER (Q25MM*16MM)
6215.00001.02	M6 WASHER SUPPORTING RING
6214.00013.10	M6 NYLON INSERT LOCK NUT
6262.00059.00	REDACTOR BELLOWS

Codes / Item Names	
2710.550.00580200.0.01	OBK 2000 - 1500 BELLOW CONNECTION
2710.20051.66	REDUKTOR MOTION HANDLE PIPE Q21
2710.20051.83	OBK 2000 - 1500 REDUCER SLIDE MOTION COUPLING (Q12)
2710.20051.67	OBK 2000 - 1500 REDUCER CONNECTION 'Y PART
2710.2051B.87	OBK 2000 - 1500 REDUCER MOVEMENT FORK
6262.00047.04	ROLLOVERS
2710.20051.41	OBK 2000 - 1500 REDUCER FLANGE
6262.00006.03	REDUCER SHAFT INOX
6262.00015.01	REDUCER

BRAND NAME			MODEL NAME		
R&D	NAME	DATE	PROJECT NO	MATERIAL	VERSION
DRAWN					V25.10
CONTROL	S.GÜRCÜ	12.05.2026	AUTHOR		
APPROV.	M.HACI	12.05.2026			

TATRA

DESCRIPTION: 076R.1111KR.BI-076L.1111KR.BI SLIDE GROUP EXPLODED

DO NOT SCALE FROM DRAWING!

ALL DIMENSIONS ARE IN (mm)

WEIGHT(gr.)		THICKNESS		REVISION		SCALE	

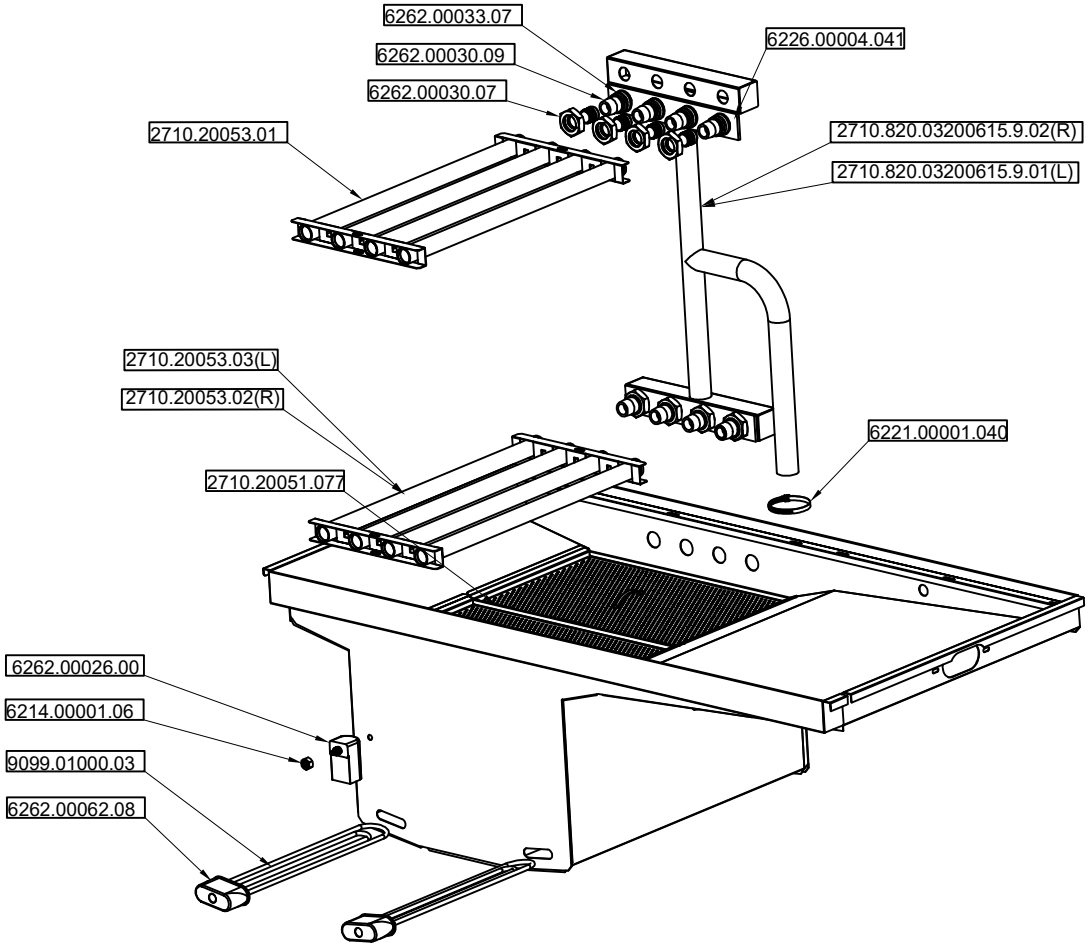

Codes / Item Names	
6226.00004.041	GASKET (320MMX50MMX0,5MM, Q27 MM HOLE)
6262.00033.07	WASHER ARM SEALING GASKET (EXTERNAL Q40MM INTERNAL Q26,4MM*K4MM)
6262.00030.07	WASHING HANDLE JOINT NUT Q40,5*14
6262.00030.09	WASHING ARM JOINT CONICAL GASKET
2710.20053.01	OBK 1500 / 2000 / 3000 TOP WASHING FLUSH COLLECTOR COLLECTED
2710.20053.03(L)	OBK 1500 / 2000 / 3000 COLLECTOR FOR THE LOWER FLUSH FLUSH COLLECTOR (LEFT ENTRY)
2710.20053.02(R)	OBK 1500 / 2000 / 3000 COLLECTOR FOR THE LOWER FLUSH FLUSH COLLECTOR (RIGHT INLET)
2710.20051.77	OBK 2000 - 1500 MAIN WASHING STRAINER
6262.00026.00	AIR TRAP
6214.00001.06	M12 NUT
9099.01000.03	RESISTANCE 2000+25000W
6262.00062.08	WASHING TANK HEATER COVER
6221.00001.040	CLAMP 40-60MM
2710.820.03200615.9.01(L)	OBK 1500 / 2000 / 3000 MAIN WASH PIPE COLLECTOR COLLECTED (LEFT ENTRY)
2710.820.03200615.9.02(R)	OBK 1500 / 2000 / 3000 MAIN WASH PIPE COLLECTOR COLLECTED (RIGHT ENTRY)

BRAND NAME			MODEL NAME		
R&D	NAME	DATE	PROJECT NO	MATERIAL	VERSION
DRAWN					V25.10
CONTROL	S.GURCO	12.05.2026			
APPROV.	M.HACI	12.05.2026			
WEIGHT(gr.)		THICKNESS		REVISION	SCALE

TATRA

DESCRIPTION: 076R.1111KR.BI-076L.1111KR.BI WASHING GROUP EXPLODED

DESCRIPTION 2:

DRAWING NO:

DO NOT SCALE FROM DRAWING!

ALL DIMENSIONS ARE IN (mm)

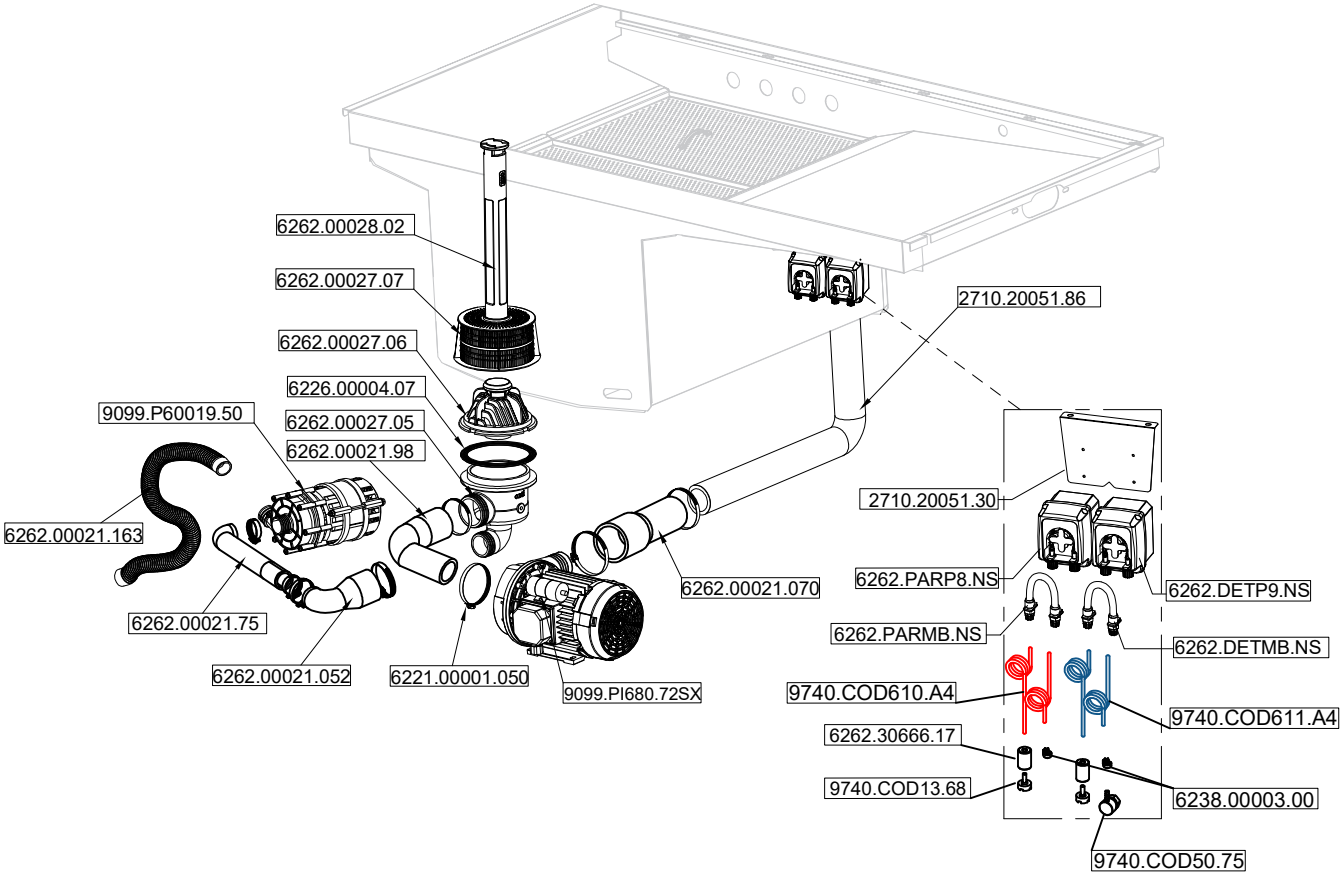

Codes / Item Names	
6262.00028.02	DRAIN PLUG PLASTIC (415 MM) 1500 T/S OPEN
6262.00027.07	SUCTION FILTER TOP PART
6262.00027.06	SUCTION FILTER CENTER PART
6226.00004.07	SUCTION FILTER SEAL
6262.00027.05	SUCTION FILTER LOWER PART
6262.00021.98	HOSE ELBOW DIAMETER 60 X 60 MM
9099.P60019.50	Drain Pump
6262.00021.163	WATER DISCHARGE HOSE
6262.00021.75	Drain Connection hose
6262.00021.052	Drain Connection hose elbow
9099.PI680.72SX	WASHING PUMP ZF650 SX L9
6221.00001.050	CLAMP 50X70
6262.DETMB.NS	Inner Detergent pump tube
6262.DETP9.NS	Detergent pump
6262.PARMB.NS	Inner rinse aid pump tube
6262.PARP8.NS	Rinse aid pump
9740.COD610.A4	Rinse aid pump hose (red) (4 meters)
9740.COD611.A4	Detergent pump hose (blue) (4 meters)
9740.COD13.68	Detergent/Rinse aid pump plastic filter
6262.30666.17	Detergent/Rinse aid pumps tainles steel weight
6238.00003.00	Cable tie
2710.20051.30	Rinse aid and detergent pump connection part
2710.20051.86	OBK 2000 - 1500 MAIN WASH PUMP OUTLET Q40 INOX

BRAND NAME			MODEL NAME		
R&D	NAME	DATE	PROJECT NO	MATERIAL	VERSION
DRAWN					V25.10
CONTROL	S.GURCO	12.05.2026			
APPROV.	M.HACI	12.05.2026			

TATRA

DESCRIPTION 076R.1111KR.BI-076L.1111KR.BI WASHING GROUP EXPLODED-2

DESCRIPTION 2

DRAWING NO

DO NOT SCALE FROM DRAWING!

ALL DIMENSIONS ARE IN (mm)

WEIGHT(gr.) | THICKNESS | REVISION | SCALE

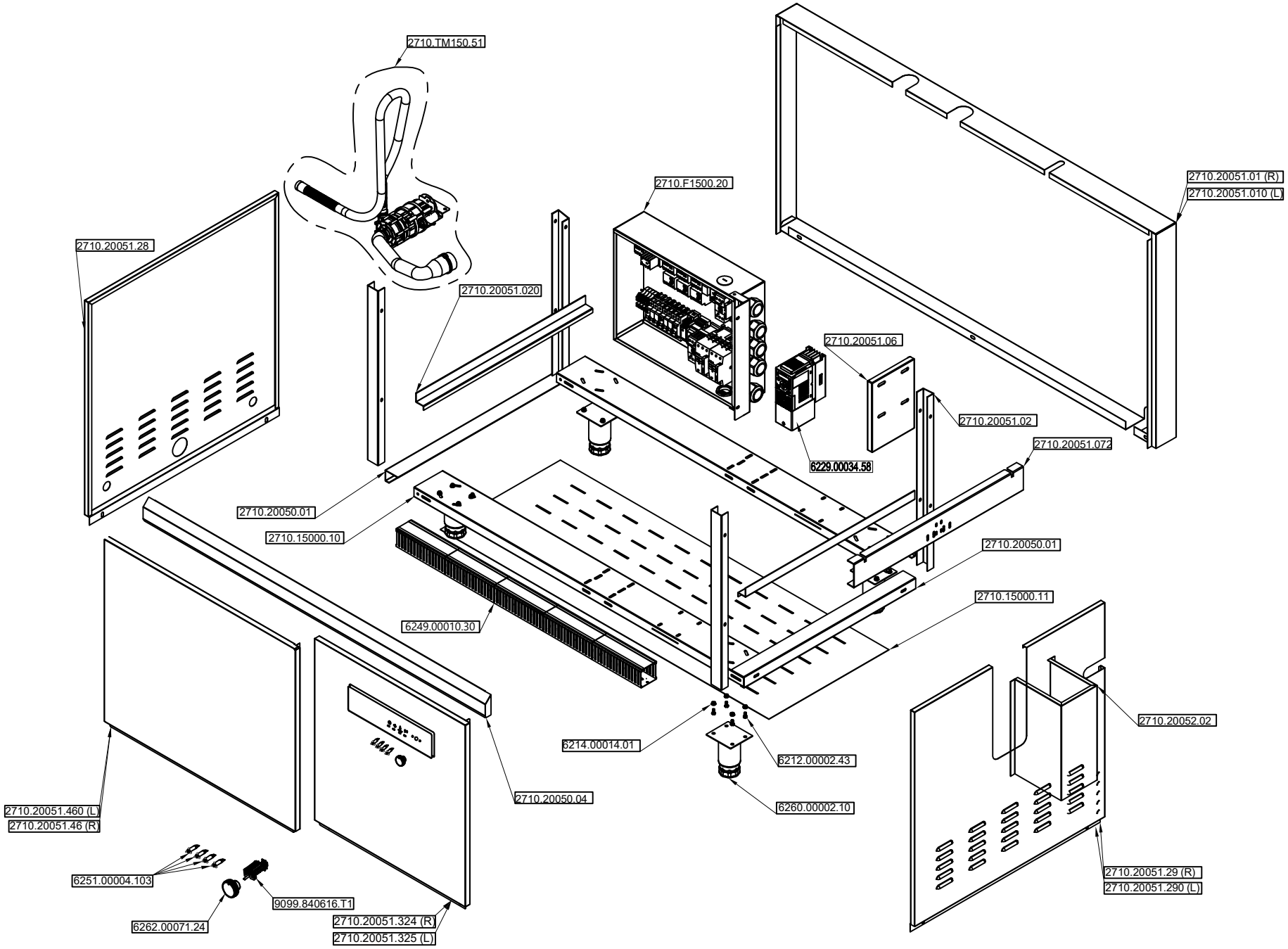

BRAND NAME			MODEL NAME			
R&D	NAME	DATE	PROJECT NO	MATERIAL	VERSION	TATRA
DRAWN					V25.10	
CONTROL	S.GURCO	16.06.2026				DESCRIPTION 076R.1111KR.BI-076L.1111KR.BI SUB CHASSIS EXPLODED
APPROV.	M.HACI	16.06.2026				DESCRIPTION 2

DO NOT SCALE FROM DRAWING! | ALL DIMENSIONS ARE IN (mm) | WEIGHT(gr.) | THICKNESS | REVISION | SCALE | DRAWING NO

Codes / Item Names	
2710.20051.28	OBK 2000 - 1500 CHASE ENTRY COVER
2710.20051.325	OBK 2000 - 1500 CONTROL LEFT FRONT PANEL
2710.20051.324	OBK 2000 - 1500 CONTROL RIGHT FRONT PANEL
2710.F1500.20	OBK 1500 - PANEL ASSEMBLED OBK 1500 WITH DRYING
2710.20051.010	OBK 1500 CHASSIS REAR COVER LEFT
2710.20051.01	OBK 1500 CHASSIS REAR COVER RIGHT
2710.20051.020	OBK 2000 - 1500 CHASSIS VERTICAL INTERCONNECTION
2710.20051.06	OBK 2000 - 1500 CHASSIS REDUCER ENGINE CONNECTION
2710.20051.02	OBK 2000 - 1500 CHASSIS RINSE VERTICAL PIECE
2710.20051.072	OBK 1500 CARRIER SLIDE WITHOUT DRYER
2710.20050.01	OBK 2000 - 1500 CHASSIS SIDE PART RIGHT / LEFT
2710.15000.11	OBK 1500 CHASSIS BOTTOM COVER
2710.20052.02	OBK 2000 - 1500 CHASSIS OUTPUT COVER REDUCER PROTECTION COVER
2710.20051.29	OBK 2000 - 1500 CHASSIS REDUCER OUTPUT COVER RIGHT
2710.20051.290	OBK 2000 - 1500 CHASSIS REDUCER OUTPUT COVER LEFT
6260.00002.10	ADJUSTABLE LEG 130-180 MM TOP TABLE 90*100
6212.00002.43	M6*12 6K INOX BOLT
6214.00014.01	M6 HEX NUT WITH FLANGE
2710.20050.04	OBK 1500 FRONT COVER PANEL
6249.00010.30	CABLE CHANNEL
2710.15000.10	OBK 1500 CHASSIS FRONT / REAR PART
2710.20051.460	OBK 1500 CHASSIS FRONT COVER LEFT
2710.20051.46	OBK 1500 CHASSIS FRONT COVER RIGHT
2710.TM150.50	OBK 1500 MECHANICAL DRAIN PUMP GROUP 50Hz
6251.00004.103	SIGNAL LAMP
6262.00071.24	BUTTON
9099.840616.T1	COMMUTATOR
6229.00034.58	INVERTER

BRAND NAME			MODEL NAME		
R&D	NAME	DATE	PROJECT NO	MATERIAL	VERSION
DRAWN					V25.10
CONTROL	S.GÜRCÜ	16.06.2026			
APPROV.	M.HACI	16.06.2026			

TATRA

DESCRIPTION: 076R.1111KR.BI-076L.1111KR.BI SUB CHASSIS EXPLODED

DO NOT SCALE FROM DRAWING! | ALL DIMENSIONS ARE IN (mm) | WEIGHT(gr.) | THICKNESS | REVISION | SCALE